# SH260 Series • Inductors for National's 260kHz Simple Switcher™

Compatible with National Semiconductor's Simple Switcher™ Part Numbers LM267X-L41 and LM267X-L45 through LM267X-L50

### Features

- High energy storage with minimum saturation
- High stability from no load to full load
- Available in both SMD and THT versions
- Manufactured in ISO-9001:2000, TS-16949:2002 and ISO-14001:2004 certified Talema facility
- Meets lead free reflow level J-STD-020C
- Fully RoHS compliant

### Electrical Specifications @ 25°C

Test voltage between windings: 500 Vrms
Operating temperature range: -40°C to +125°C
Climatic Category: IEC68-1 40/125/56
Test frequency: Inductance measured @ 10kHz / 10mV

| Part Number | National Part Number | Rated Current ($I_{DC}$) | Inductance (µH) ±20% | $ET_{OP}$ (V-µSec) Max. @ 260kHz | DCR Nominal (mOhm) | Package Size | |
|---|---|---|---|---|---|---|---|
| | | | | | | Package Code | Lead Dia. (mm) |
| SH260C-4.9-23 | LM267X-L41 | 4.9 | 22.8 | 23.3 | 36 | C3 | 0.80 |
| SH260C-4.3-10 | LM267X-L45 | 4.3 | 10.2 | 10.0 | 26 | C1 | 0.75 |
| SH260C-5.0-15 | LM267X-L46 | 5.0 | 14.8 | 17.0 | 23 | C2 | 0.80 |
| SH260C-5.0-10 | LM267X-L47 | 5.0 | 10 | 13.0 | 25 | C2 | 0.75 |
| SH260C-5.0-50 | LM267X-L48 | 5.0 | 50 | 40.0 | 50 | C4 | 0.90 |
| SH260C-5.0-33 | LM267X-L49 | 5.0 | 33 | 36.0 | 47 | C4 | 0.80 |
| SH260C-5.0-23 | LM267X-L50 | 5.0 | 23 | 24.0 | 26 | C3 | 0.80 |
| SH260S-4.9-23 | LM267X-L41 | 4.9 | 22.8 | 23.3 | 36 | SH6A | |
| SH260S-4.3-10 | LM267X-L45 | 4.3 | 10 | 10.0 | 26 | S4 | |
| SH260S-5.0-15 | LM267X-L46 | 5.0 | 15 | 17.0 | 27 | S5 | |
| SH260S-5.0-10 | LM267X-L47 | 5.0 | 11 | 13.0 | 25 | S5 | |
| SH260S-5.0-50 | LM267X-L48 | 5.0 | 52* | 40.0 | 25 | SHC7 | |
| SH260S-5.0-33 | LM267X-L49 | 5.0 | 36* | 36.0 | 19 | SHC7 | |
| SH260S-5.0-23 | LM267X-L50 | 5.0 | 24.7* | 24.0 | 13 | SHC7 | |
| SH260T-4.9-23 | LM267X-L41 | 4.9 | 22.8 | 23.3 | 36 | TH6A | |
| SH260T-4.3-10 | LM267X-L45 | 4.3 | 10 | 10.0 | 26 | T4 | |
| SH260T-5.0-15 | LM267X-L46 | 5.0 | 15 | 17.0 | 27 | T5 | |
| SH260T-5.0-10 | LM267X-L47 | 5.0 | 11 | 13.0 | 25 | T5 | |

* Note: Series connection with pins 2 - 4 connected

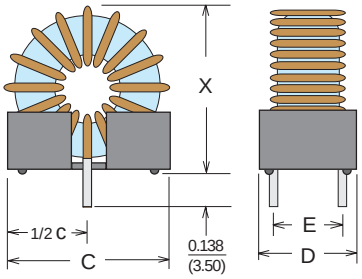


### Type SW260C - Clip Mount

| Part Number | Size Code | Dimensions - Inches ±0.01 (mm ±0.25) | | | | |
|---|---|---|---|---|---|---|
| | | C | D | E | Coil OD | X = Coil OD + |
| SH260C-4.3-10 | C1 | 0.580 (14.73) | 0.340 (8.64) | 0.220 (5.58) | 0.605 (15.40) | 0.110 (2.80) |
| SH260C-5.0-15 | C2 | 0.650 (16.50) | 0.449 (11.40) | 0.299 (7.60) | 0.640 (16.26) | 0.110 (2.80) |
| SH260-5.0-10 | C2 | 0.650 (16.50) | 0.449 (11.40) | 0.299 (7.60) | 0.590 (15.00) | 0.110 (2.80) |
| SH260C-4.9-23 SH260C-5.0-23 | C3 | 0.827 (21.00) | 0.449 (11.40) | 0.299 (7.60) | 0.840 (21.34) | 0.110 (2.80) |
| SH260C-5.0-50 SH260C-5.0-33 | C4 | 0.949 ((24.10) | 0.598 (15.20) | 0.449 (11.40) | 1.240 (31.50) | 0.110 (2.80) |

**Suggested Board Layout (Top Side View)**

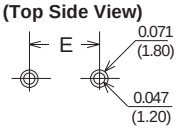


**Schematic**

# Mounting Styles • SH260 Series • Low Cost Toroidal Inductors

### S4, S5, SH6A

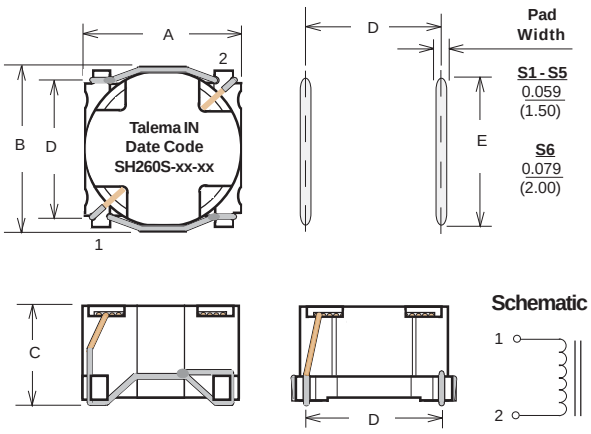


Surface Coplanarity will be <0.005(0.13)

### SHC7

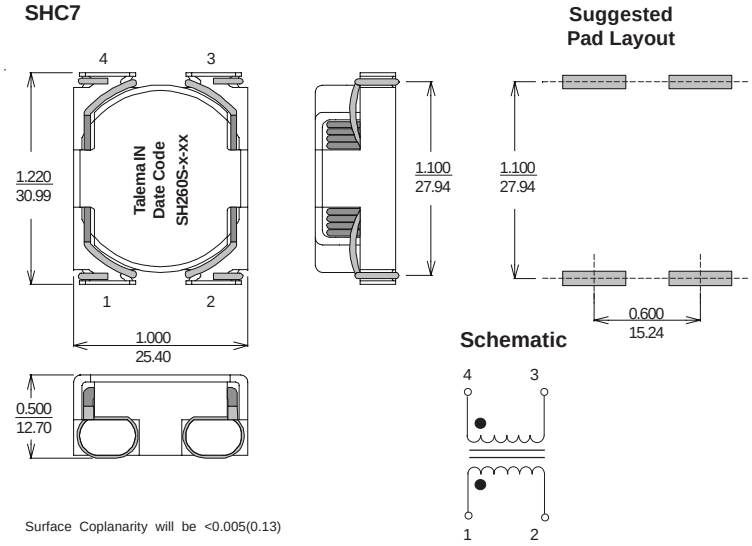


Surface Coplanarity will be <0.005(0.13)

### T4, T5, TH6A

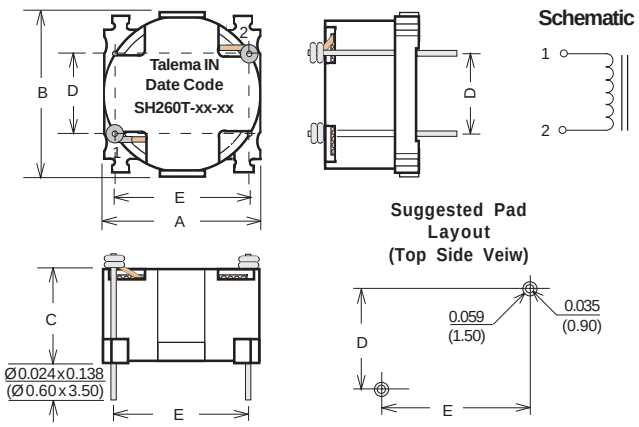


| Mounting Style | Size Code | Dimensions - Inches ±0.010 (mm ±0.25) | | | | |
|---|---|---|---|---|---|---|
| | | A | B | C | D | E |
| "S" SMD | S4 | 0.591 (15.0) | 0.614 (15.6) | 0.394 (10.0) | 0.508 (12.9) | 0.551 (14.0) |
| | S5 | 0.669 (17.0) | 0.701 (17.8) | 0.441 (11.2) | 0.591 (15.0) | 0.630 (16.0) |
| | SH6A | 0.925 (23.5) | 0.957 (24.3) | 0.417 (10.6) | 0.827 (21.0) | 0.748 (19.0) |
| "T" THT | T4 | 0.591 (15.0) | 0.614 (15.6) | 0.358 (9.10) | 0.300 (7.62) | 0.500 (12.70) |
| | T5 | 0.669 (17.0) | 0.701 (17.8) | 0.409 (10.40) | 0.600 (15.24) | 0.500 (12.70) |
| | TH6A | 0.925 (23.5) | 0.957 (24.3) | 0.386 (9.80) | 0.650 (16.51) | 0.800 (20.32) |

## SH260 Series Cross Reference for National's 260kHz Simple Switcher™

| Pulse Part Number | | National Part Number | L (µH) ±20% Clip - SMD | $I_{DC}$ (Amps) | Talema Part Number | |
|---|---|---|---|---|---|---|
| Clip Mount | SMD | | | | Clip Mount (THT) | SMD |
| P0841 | P0841S | LM267X-L41 | 22.8 - 23 | 4.9 | SH260C-4.9-23 | SH260S-4.9-23 |
| P0845 | P0845S | LM267X-L45 | 10.2 - 10 | 4.3 | SH260C-4.3-10 | SH260S-4.3-10 |
| P0846 | P0846S | LM267X-L46 | 14.8 - 15 | 5.0 | SH260C-5.0-15 | SH260S-5.0-15 |
| P0847 | P0847S | LM267X-L47 | 10 - 11 | 5.0 | SH260C-5.0-10 | SH260S-5.0-10 |
| P0848 | P0848S | LM267X-L48 | 50 - 52 | 5.0 | SH260C-5.0-50 | SH260S-5.0-50 |
| P0849 | P0849S | LM267X-L49 | 33 - 36 | 5.0 | SH260C-5.0-33 | SH260S-5.0-33 |
| P0850 | P0850S | LM267X-L50 | 23 - 24.7 | 5.0 | SH260C-5.0-23 | SH260S-5.0-23 |